Contractor's Product Submittal/Substitution Request

TO:

PROJECT:

PROJECT LOCATION:

SPECIFIED ITEM:

Section	Page	Paragraph	Description

PRODUCT SUBMITTAL / SUBSTITUTION REQUESTED

Aerosmith® Sure-Wedge® Anchors

The attached submittal package includes the product description, specifications, drawings, and performance data for use in the evaluation of the request.

SUBMITTED BY:

Name: Signature:

Company:

Address:

Date: Telephone: Fax:

FOR USE BY THE ARCHITECT AND/OR ENGINEER

☐ **Approved** ☐ **Approved as Noted** ☐ **Not Approved**

(If not approved, please briefly explain why the product was not accepted.)

By: Date:

Remarks:

Questions or inquiries? Contact us at 1.800.528.8183

©2026 AEROSMITH®

Sure-Wedge® Anchors

Sure-Wedge® Anchors

Aerosmith®'s Sure-Wedge® is a heavy duty mechanical anchor with torque-controlled, mechanical expansion, consisting of an anchor body, expansion clip, nut and washer. The anchor body has a tapered mandrel formed on the installed end of the anchor and a threaded section at the opposite end. Suitable base materials include, normal weight concrete and lightweight concrete. The anchors are used to resist static; wind and seismic tension and shear loads in cracked and uncracked normal weight and lightweight concrete having a specific compressive strength of 2500 PSI to 8500 PSI. The anchor is manufactured with a zinc plated carbon steel body and sherardized clip that wraps around the mandrel, rotating freely before installation.

Suitable for installation in CRACKED CONCRETE, UNCRACKED CONCRETE, REINFORCED CONCRETE & STONE.

Applications:

- Barriers
- Railings
- Warehouse racking
- Conveyor systems
- Machinery
- Signage
- Fence posts
- Shelving
- Windows
- Overhead doors
- Electrical pipes
- Light fixtures

Features and Benefits:

- Consistent performance in all types of concrete
- Drill size same as anchor size
- Easy and simple installation
- One piece design
- Comes complete with nuts and washers

Base Material:

- Solid concrete
- Grout-filled masonry
- Hard stone

Anchor Component Materials:

Carbon Steel Zinc Plated
(body, nut, washer and expansion clip)

Performance Data:

Download PDF

Installation Instructions:

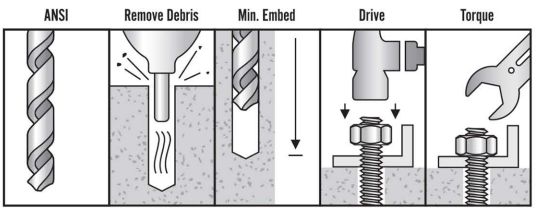

Approvals:

Category 1 Cracked & Uncracked Concrete ICC-ES ESR-4413
IBC Listed 2015, 2018, 2021, 2024
IRC Listed 2015, 2018, 2021, 2024
CBC 2025 Listed
LABC 2024 Listed LARC 2024 Listed
FBC Building 2020, 2023 Listed
FRC Residential 2020, 2023 Listed

ICC ES ESR-4413

Download the ESR-4413 (PDF) »

SEISMIC REGION QUALIFICATION
TENSION ZONE CRACKED CONCRETE
FIRE RESISTANCE

Aerosmith® Sure-Wedge® Anchor Specifications

Part ID	Description	Overall Length	Diameter	Drill Diameter	Min. Embed	Max. Torque	Box Qty.	Carton Qty.
*WA14134CC	Wedge Anchor Zinc ICC 1/4" X 1-3/4"	1-3/4"	1/4"	1/4"	1-1/2"	4 ft lbs	100	800
WA14214CC	Wedge Anchor Zinc ICC 1/4" X 2-1/4"	2-1/4"	1/4"	1/4"	2"	4 ft lbs	100	800
WA14314CC	Wedge Anchor Zinc ICC 1/4" X 3 1/4"	3-1/4"	1/4"	1/4"	2"	4 ft lbs	100	800
*WA38214CC	Wedge Anchor Zinc ICC 3/8" X 2-1/4"	2-1/4"	3/8"	3/8"	2-1/3"	30 ft lbs	50	400
*WA38234CC	Wedge Anchor Zinc ICC 3/8" X 2-3/4"	2-3/4"	3/8"	3/8"	2-1/3"	30 ft lbs	50	400
WA38300CC	Wedge Anchor Zinc ICC 3/8" X 3"	3"	3/8"	3/8"	2-1/3"	30 ft lbs	50	200
WA38312CC	Wedge Anchor Zinc ICC 3/8" X 3-1/2"	3-1/2"	3/8"	3/8"	2-1/3"	30 ft lbs	50	200
WA38334CC	Wedge Anchor Zinc ICC 3/8" X 3-3/4"	3-3/4"	3/8"	3/8"	2-1/3"	30 ft lbs	50	200
WA38500CC	Wedge Anchor Zinc ICC 3/8" X 5"	5"	3/8"	3/8"	2-1/3"	30 ft lbs	50	200
WA38700CC	Wedge Anchor Zinc ICC 3/8" X 7"	7"	3/8"	3/8"	2-1/3"	30 ft lbs	50	100
*WA12234CC	Wedge Anchor Zinc ICC 1/2" X 2-3/4"	2-3/4"	1/2"	1/2"	2-1/3"	30 ft lbs	50	200
WA12334CC	Wedge Anchor Zinc ICC 1/2" X 3-3/4"	3-3/4"	1/2"	1/2"	2-1/3"	45 ft lbs	50	100
WA12412CC	Wedge Anchor Zinc ICC 1/2" X 4-1/2"	4-1/2"	1/2"	1/2"	2-1/3"	45 ft lbs	50	100
WA12512CC	Wedge Anchor Zinc ICC 1/2" X 5-1/2"	5-1/2"	1/2"	1/2"	2-1/3"	45 ft lbs	25	100
WA12700CC	Wedge Anchor Zinc ICC 1/2" X 7"	7"	1/2"	1/2"	2-1/3"	45 ft lbs	25	100
WA12100CC	Wedge Anchor Zinc ICC 1/2" X 10"	10"	1/2"	1/2"	2-1/3"	45 ft lbs	25	50
*WA58312CC	Wedge Anchor Zinc ICC 5/8" X 3-1/2"	3-1/2"	5/8"	5/8"	3-1/4"	75 ft lbs	20	80
WA58412CC	Wedge Anchor Zinc ICC 5/8" X 4-1/2"	4-1/2"	5/8"	5/8"	3-1/4"	75 ft lbs	20	80
WA58500CC	Wedge Anchor Zinc ICC 5/8" X 5"	5"	5/8"	5/8"	3-1/4"	75 ft lbs	20	80
WA58600CC	Wedge Anchor Zinc ICC 5/8" X 6"	6"	5/8"	5/8"	3-1/4"	75 ft lbs	20	40
WA58700CC	Wedge Anchor Zinc ICC 5/8" X 7"	7"	5/8"	5/8"	3-1/4"	75 ft lbs	20	40
WA58812CC	Wedge Anchor Zinc ICC 5/8" X 8-1/2"	8-1/2"	5/8"	5/8"	3-1/4"	75 ft lbs	20	40
*WA34414CC	Wedge Anchor Zinc ICC 3/4" X 4-1/4"	4-1/4"	3/4"	3/4"	3-3/4"	150 ft lbs	10	40
*WA34434CC	Wedge Anchor Zinc ICC 3/4" X 4-3/4"	4-3/4"	3/4"	3/4"	3-3/4"	150 ft lbs	10	40
WA34512CC	Wedge Anchor Zinc ICC 3/4" X 5-1/2"	5-1/2"	3/4"	3/4"	3-3/4"	150 ft lbs	10	40
WA34614CC	Wedge Anchor Zinc ICC 3/4" X 6-1/4"	6-1/4"	3/4"	3/4"	3-3/4"	150 ft lbs	10	40
WA34700CC	Wedge Anchor Zinc ICC 3/4" x 7"	7"	3/4"	3/4"	3-3/4"	150 ft lbs	10	40
WA34812CC	Wedge Anchor Zinc ICC 3/4" X 8-1/2"	8-1/2"	3/4"	3/4"	3-3/4"	150 ft lbs	10	20
WA34100CC	Wedge Anchor Zinc ICC 3/4" X 10"	10"	3/4"	3/4"	3-3/4"	150 ft lbs	10	20

*This size is less than the required minimum standard anchor length for strength design

Established over 50 years ago, Aerosmith® Fastening Systems continues to be a leader in developing hardened steel pins & specialty tools for today's unique application challenges, including plywood, Hardie, and track to steel and concrete applications. Our expertise has led to numerous patents for fasteners, as well as tools (nailers, nail guns, etc.).

Construction, Industrial/OEM, and Specialty users benefit from Aerosmith® systems by saving time, money, and manpower! Headquartered in Indianapolis, Indiana, Aerosmith® is able and positioned to serve both the United States and a Worldwide Market!

Contact Aerosmith® HQ

Address:
5621 Dividend Road
Indianapolis, Indiana 46241

Phone:
P: 844.373.2666
F: 914.817.0168

Follow:

© 2026 Aerosmith Fastening. All rights reserved.

ICC-ES Evaluation Report

ESR-4413

Reissued March 2026

Subject to renewal March 2027

This report also contains:

- City of LA Supplement
- CA Supplement
- FL Supplement w/HVHZ

ICC-ES Evaluation Reports are not to be construed as representing aesthetics or any other attributes not specifically addressed, nor are they to be construed as an endorsement of the subject of the report or a recommendation for its use. There is no warranty by ICC Evaluation Service, LLC, express or implied, as to any finding or other matter in this report, or as to any product covered by the report.

Copyright © 2026 ICC Evaluation Service, LLC. All rights reserved.

DIVISION: 03 00 00—CONCRETE Section: 03 16 00—Concrete Anchors DIVISION: 05 00 00—METALS Section: 05 05 19—Post-Installed Concrete Anchors	REPORT HOLDER: AEROSMITH FASTENING SYSTEMS	EVALUATION SUBJECT: AEROSMITH SURE-WEDGE™ ANCHOR FOR CRACKED AND UNCRACKED CONCRETE	

1.0 EVALUATION SCOPE

Compliance with the following codes:

- 2021, 2018, 2015, 2012, 2009 and 2006 *International Building Code®* (IBC)
- 2021, 2018, 2015, 2012, 2009 and 2006 *International Residential Code* (IRC)

Property evaluated:

- Structural

2.0 USES

The ¼-inch (6.4 mm) Aerosmith Sure-Wedge Anchor Carbon and Stainless steel are used as anchorage to resist static, wind and seismic (Seismic Design Categories A and B) tension and shear loads in uncracked normal-weight and lightweight concrete having a specified compressive strength, f'_c, of 2,500 psi to 8,500 psi (17.2 MPa to 58.6 MPa).

The $^3/_8$-inch through ¾-inch (9.5 mm through 19.1 mm) Aerosmith Sure-Wedge Anchor Carbon and Stainless steel are used as anchorage to resist static, wind and seismic (Seismic Design Categories A through F) tension and shear loads in cracked and uncracked normal-weight and lightweight concrete having a specified compressive strength, f'_c, of 2,500 psi to 8,500 psi (17.2 MPa to 58.6 MPa).

The Aerosmith Sure-Wedge Anchors comply with Section 1901.3 of the 2021, 2018, and 2015 IBC, Section 1909 of the 2012 IBC and Section 1912 of the 2009 and 2006 IBC. The anchor system is an alternative to cast-in-place anchors described in Section 1901.3 of the 2021, 2018, and 2015 IBC, Section 1908 of the 2012 IBC, and Section 1911 of the 2009 and 2006 IBC. The anchors may also be used where an engineered design is submitted in accordance with Section R301.1.3 of the IRC.

3.0 DESCRIPTION

3.1 General:

Aerosmith Sure-Wedge Anchors are torque-controlled, mechanical expansion anchors consisting of an anchor body, expansion clip, nut and washer. A typical anchor is shown in Figure 3 of this report. The anchor body has a tapered mandrel formed on the installed end of the anchor and a threaded section at the opposite end. The taper of the mandrel increases in diameter towards the installed end of the anchor.

The three-segment expansion clip wraps around the tapered mandrel. Before installation, this expansion clip is free to rotate about the mandrel. The anchor is set by applying torque to the hex nut; the mandrel is drawn into the expansion clip, which engages the drilled hole and transfers the load to the base material. Pertinent dimensions are given in Tables 1 and 2 of this report.

3.2 Sure-Wedge Anchor, Carbon Steel:

The anchor bodies are manufactured by cold forming from carbon steel materials conforming to JIS G 3507. The zinc plating on the anchor body complies with ASTM B633 SC1 type III, with a minimum 0.0002 inch (5 µm) thickness. The expansion clip is fabricated from low carbon steel conforming to JIS G 3141. The sherardized coating of the clips complies with EN 13811 Class 15 with a minimum 0.0006 inch (15 µm) thickness. The hex nut for the carbon steel Sure-Wedge anchor conforms to ASME B18.2.2. The washer for the carbon steel Sure-Wedge anchor conforms to ASME B18.21.1. The available anchor diameters under this report are: ¼ inch, $^3/_8$ inch, $^1/_2$ inch, $^5/_8$ inch, and $^3/_4$ inch.

3.3 Sure-Wedge Anchor, Stainless Steel:

The anchor bodies are manufactured by machining and cold forming from stainless steel materials conforming to AISI 304 and 304HC respectively. The expansion clip is fabricated from stainless steel conforming to AISI 304. The sherardized coating of the clips complies with EN 13811 Class 15 with a minimum 0.0006 inch (15 µm) thickness. The hex nut for the stainless steel MTD-M anchor conforms to ASTM F594. The washer for the stainless steel MTD-M anchor conforms to ASME B18.21.1. The available anchor diameters under this report are: ¼ inch, $^3/_8$ inch, $^1/_2$ inch, $^5/_8$ inch, and $^3/_4$ inch.

3.4 Concrete:

Normal-weight and lightweight concrete must conform to Sections 1903 and 1905 of the IBC, as applicable.

4.0 DESIGN AND INSTALLATION

4.1 Strength Design:

4.1.1 General: Design strength of anchors complying with the 2021 IBC, as well as Section R301.1.3 of the 2021 IRC must be determined in accordance with ACI 318-19 Chapter 17 and this report.

Design strength of anchors complying with the 2018 and 2015 IBC, as well as Section R301.1.3 of the 2018 and 2015 IRC must be determined in accordance with ACI 318-14 Chapter 17 and this report.

Design strength of anchors complying with the 2012 IBC, and the 2012 IRC, must be in accordance with ACI 318-11 Appendix D and this report.

Design strength of anchors complying with the 2009 IBC and 2009 IRC must be in accordance with ACI 318-08 Appendix D and this report.

Design strength of anchors complying with the 2006 IBC and 2006 IRC must be in accordance with ACI 318-05 Appendix D and this report.

Design parameters are based on the 2021 IBC (ACI 318-19), 2018 and 2015 IBC (ACI 318-14) and the 2012 IBC (ACI 318-11) unless noted otherwise in Sections 4.1.1 through 4.1.12 of this report. The strength design of anchors must comply with ACI 318-19 17.5.1.2, ACI 318-14 17.3.1 or ACI 318-11 D.4.1, as applicable, except as required in ACI 318-19 17.10, ACI 318-14 17.2.3 or ACI 318-11 D.3.3, as applicable. Strength reduction factors, ϕ, as given in ACI 318-19 17.5.3, ACI 318-14 17.3.3 or ACI 318-11 D.4.3, as applicable, must be used for load combinations calculated in accordance with Section 1605.1 of the 2021 IBC or Section 1605.2 of the 2018, 2015 and 2012 IBC and Section 5.3 of ACI 318 (-19 and -14) or Section 9.2 of ACI 318-11, as applicable. Strength reduction factors, ϕ, as given in ACI 318-11 D.4.4 must be used for load combinations calculated in accordance with ACI 318-11 Appendix C.

The value of f'_c used in the calculations must be limited to a maximum of 8,000 psi (55.2 MPa), in accordance with ACI 318-19 17.3.1, ACI 318-14 17.2.7 or ACI 318-11 D.3.7, as applicable.

4.1.2 Requirements for Static Steel Strength in Tension, N_{sa}: The nominal static steel strength in tension must be calculated in accordance with ACI 318-19 17.6.1.2, ACI 318-14 17.4.1.2 or ACI 318-11 D.5.1.2, as applicable. The values for N_{sa} are given in Tables 4 and 5 of this report. Strength reduction factors, ϕ, corresponding to ductile steel elements may be used for Sure-Wedge anchors.

4.1.3 Requirements for Static Concrete Breakout Strength in Tension, N_{cb} and N_{cbg}: The nominal concrete breakout strength of a single anchor or group of anchors in tension, N_{cb} and N_{cbg}, respectively, must be calculated in accordance with ACI 318-19 17.6.2, ACI 318-14 17.4.2 or ACI 318-11 D.5.2, as applicable, with modifications as described in this section. The basic concrete breakout strength of a single anchor in tension, N_b, must be calculated in accordance with ACI 318-19 17.6.2.2, ACI 318-14 17.4.2.2 or ACI 318-11 D.5.2.2, as applicable, using the values of h_{ef} and k_{cr} as given in Tables 4 and 5 of this report.

The nominal concrete breakout strength in tension, in regions where analysis indicates no cracking in accordance with ACI 318-19 17.6.2.5.1, ACI 318-14 17.4.2.6 or ACI 318-11 D.5.2.6, as applicable, must be calculated with $\psi_{c,N}$ = 1.0 and using the value of k_{uncr} as given in Tables 4 and 5 of this report.

4.1.4 Requirements for Static Pullout Strength in Tension, N_p: The nominal pullout strength of a single anchor, in accordance with ACI 318-19 17.6.3.1 and 17.6.3.2.1, ACI 318-14 17.4.3.1 and 17.4.3.2 or ACI 318-11 D.5.3.1 and D.5.3.2, as applicable, in cracked and uncracked concrete, $N_{p,cr}$ and $N_{p,uncr}$, respectively, is given in Tables 4 and 5 of this report. In lieu of ACI 318-19 17.6.3.3, ACI 318-14 17.4.3.6 or ACI 318-11 D.5.3.6, as applicable, $\psi_{c,P}$ = 1.0 for all design cases. In accordance with ACI 318-19 17.6.3.2.1, ACI 318-14 17.4.3.2 or ACI 318-11 D.5.3.2, as applicable, the nominal pullout strength in cracked concrete must be adjusted by calculation according to the following equation:

$$N_{p,f'c} = N_{p,cr}\left(\frac{f'_c}{2{,}500}\right)^n \qquad \text{(lb, psi)} \quad \text{(Eq-1)}$$

$$N_{p,f'c} = N_{p,cr}\left(\frac{f'_c}{17.2}\right)^n \qquad \text{(N, MPa)}$$

In regions where analysis indicates no cracking in accordance with ACI 318-19 17.6.3.3, ACI 318-14 17.4.3.6 or ACI 318-11 D.5.3.6, as applicable, the nominal pullout strength in tension must be calculated according to the following equation:

$$N_{p,f'c} = N_{p,uncr}\left(\frac{f'_c}{2{,}500}\right)^n \qquad \text{(lb, psi)} \quad \text{(Eq-2)}$$

$$N_{p,f'c} = N_{p,uncr}\left(\frac{f'_c}{17.2}\right)^n \qquad \text{(N, MPa)}$$

n = normalization exponent given in Tables 4 and 5.

Where values for $N_{p,cr}$ or $N_{p,uncr}$ are not provided in Tables 4 and 5, the pullout strength in tension need not be evaluated.

4.1.5 Requirements for Static Steel Strength in Shear, V_{sa}: The nominal steel strength in shear, V_{sa}, in accordance with ACI 318-19 17.7.1.2, ACI 318-14 17.5.1.2 or ACI 318-11 D.6.1.2, as applicable, is given in Tables 4 and 5 of this report and must be used in lieu of the value derived by calculation from ACI 318-19 Eq. 17.7.1.2b, ACI 318-14 Eq 17.5.1.2b or ACI 318-11 Eq D-29, as applicable. Strength reduction factors, ϕ, corresponding to ductile steel elements may be used for the Sure-Wedge.

4.1.6 Requirements for Static Concrete Breakout Strength in Shear, V_{cb} or V_{cbg}: The nominal concrete breakout strength in shear of a single anchor or group of anchors, V_{cb} or V_{cbg}, respectively, must be calculated in accordance with ACI 318-19 17.7.2, ACI 318-14 17.5.2 or ACI 318-11 D.6.2, as applicable, with modifications as provided in this section. The basic concrete breakout strength of a single anchor in shear, V_b, must be calculated in accordance with ACI 318-19 17.7.2.2.1, ACI 318-14 17.5.2.2 or ACI 318-11 D.6.2.2, as applicable, using values of l_e and d_a (d_o) given in Tables 4 and 5 of this report.

4.1.7 Requirements for Static Concrete Pryout Strength in Shear, V_{cp} or V_{cpg}: The nominal static concrete pryout strength of a single anchor or group of anchors in shear, V_{cp} or V_{cpg}, must be calculated in accordance with ACI 318-19 17.7.3, ACI 318-14 17.5.3 or ACI 318-11 D.6.3, as applicable, modified by using the value of k_{cp} provided in Tables 4 and 5 of this report and the value of N_{cb} or N_{cbg} as calculated in accordance with Section 4.1.3 of this report.

4.1.8 Requirements for Seismic Design:

4.1.8.1 General: For load combinations including seismic, the design must be performed in accordance with ACI 318-19 17.10, ACI 318-14 17.2.3 or ACI 318-11 D.3.3, as applicable. Modification to ACI 318-19 17.10 shall be applied under Section 1905.1.8 of the 2021 IBC. Modifications to ACI 318-14 17.2.3 shall be applied under Section 1905.1.8 of the 2015 IBC. For the 2012 IBC, Section 1905.1.9 shall be omitted. Modifications to ACI 318 (-08, -05) D.3.3 shall be applied under Section 1908.1.9 of the 2009 IBC, or Section 1908.1.16 of the 2006 IBC as applicable.

4.1.8.2 Seismic Tension: The nominal steel strength and the nominal concrete breakout strength for anchors in tension must be calculated according to ACI 318-19 17.6.1 and 17.6.2, ACI 318-14 17.4.1 and 17.4.2 or ACI 318-11 D.5.1 and D.5.2, respectively, as applicable, as described in Sections 4.1.2 and 4.1.3 of this report. In accordance with ACI 318-19 17.6.3.2.1, ACI 318-14 17.4.3.2 or ACI 318-11 D.5.3.2, as applicable, the appropriate pullout strength in tension for seismic loads, $N_{p,eq}$ may be adjusted by calculation for concrete strength in accordance with Eq-1 and section 4.1.4 whereby the value of $N_{p,eq}$ must be substituted for $N_{p,cr}$. If no values for $N_{p,eq}$ are given in Tables 4 and 5, the static design values govern.

4.1.8.3 Seismic Shear: The nominal concrete breakout strength and pryout strength for anchors in shear must be calculated according to ACI 318-19 17.7.2 and 17.7.3, ACI 318-14 17.5.2 and 17.5.3 or ACI 318-11 D.6.2 and D.6.3, respectively, as applicable, as described in Sections 4.1.6 and 4.1.7 of this report. In accordance with ACI 318-19 17.7.1.2, ACI 318-14 17.5.1.2 or ACI 318-11 D.6.1.2, as applicable, the appropriate value for nominal steel strength for seismic loads, $V_{sa,eq}$ described in Table 3 must be used in lieu of V_{sa}.

4.1.9 Requirements for Interaction of Tensile and Shear Forces: For anchors or groups of anchors that are subject to the effects of combined tensile and shear forces, the design must be performed in accordance with ACI 318-19 17.8, ACI 318-14 17.6 or ACI 318-11 D.7, as applicable.

4.1.10 Requirements for Critical Edge Distance: In applications where $c < c_{ac}$ and supplemental reinforcement to control splitting of the concrete is not present, the concrete breakout strength in tension for uncracked concrete, calculated according to ACI 318-19 17.6.2, ACI 318-14 17.4.2 or ACI 318-11 D.5.2, as applicable, must be further multiplied by factor $\psi_{cp,N}$ as given by the following equation:

$$\psi_{cp,N} = \frac{c}{c_{ac}} \qquad \text{(Eq-3)}$$

where the factor $\psi_{cp,N}$ need not be taken as less than $1.5h_{ef} / c_{ac}$. For all other cases, $\psi_{cp,N}$ = 1.0. In lieu of ACI 318-19 17.9.5, ACI 318-14 17.7.6 or ACI 318-11 D.8.6, as applicable, values for the critical edge distance c_{ac} must be taken from Tables 1 and 2 of this report.

4.1.11 Requirements for Minimum Member Thickness, Minimum Anchor Spacing and Minimum Edge Distance: In lieu of ACI 318-19 17.9.2, ACI 318-14 17.7.1 and 17.7.3 or ACI 318-11 D.8.1 and D.8.3, respectively, as applicable, values of s_{min} and c_{min} as given in Tables 1 and 2 of this report must be used. In lieu of ACI 318-19 17.9.4, ACI 318-14 17.7.5 or ACI 318-11 D.8.5, as applicable, minimum member thickness h_{min} as given in Tables 1 and 2 of this report must be used. Additional combinations for minimum edge distance c_{min} and spacing s_{min} may be derived by linear interpolation between the given boundary values as shown in the following figures.

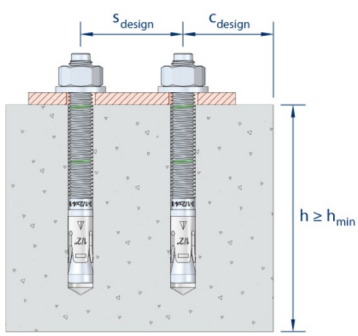

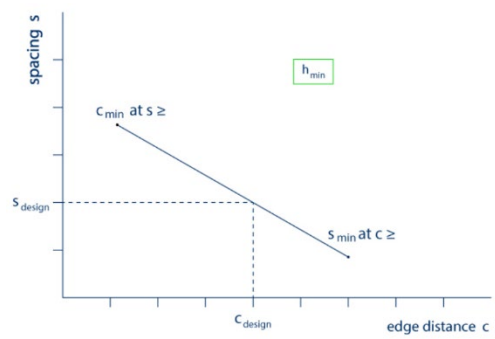

4.1.12 Lightweight Concrete: For the use of anchors in lightweight concrete, the modification factor λ_a equal **to** 0.8λ is applied to all values of $\sqrt{f'_c}$ affecting N_n and V_n.

For ACI 318-19 (2021 IBC), ACI 318-14 (2018 and 2015 IBC), ACI 318-11 (2012 IBC) and ACI 318-08 (2009 IBC), λ shall be determined in accordance with the corresponding version of ACI 318.

For ACI 318-05 (2006 IBC), λ shall be taken as 0.75 for all lightweight concrete and 0.85 for sand-lightweight concrete. Linear interpolation shall be permitted if partial sand replacement is used. In addition, the pullout strengths $N_{p,uncr}$, $N_{p,cr}$ and $N_{p,eq}$ shall be multiplied by the modification factor, λ_a, as applicable.

4.2 Allowable Stress Design (ASD):

4.2.1 General: Design values for use with allowable stress design load combinations calculated in accordance with Section 1605.1 of the 2021 IBC or Section 1605.3 of the 2018, 2015, 2012, 2009 and 2006 IBC shall be established as follows:

$$T_{allowable,ASD} = \frac{\phi N_n}{\alpha} \qquad \text{(Eq-4)}$$

$$V_{allowable,ASD} = \frac{\phi V_n}{\alpha} \qquad \text{(Eq-5)}$$

where,

$T_{allowable,ASD}$ = Allowable tension load (lbf or kN)

$V_{allowable,ASD}$ = Allowable shear load (lbf or kN)

ϕN_n = Lowest design strength of an anchor or anchor group in tension as determined in accordance with ACI 318 (-19 and -14) Chapter 17 and 2021, 2018 and 2015 IBC Section 1905.1.8, ACI 318 (-11, -08) Appendix D and 2009 IBC Section 1908.1.9, ACI 318-05 Appendix D and 2006 IBC Section 1908.1.16, and Section 4.1 of this report, as applicable. For the 2012 IBC, Section 1905.1.9 shall be omitted.

ϕV_n = Lowest design strength of an anchor or anchor group in shear as determined in accordance with ACI 318 (-19 and -14) Chapter 17 and 2021, 2018 and 2015 IBC Section 1905.1.8, ACI 318 (-11, -08) Appendix D and 2009 IBC Section 1908.1.9, ACI 318-05 Appendix D and 2006 IBC Section 1908.1.16, and Section 4.1 of this report, as applicable. For the 2012 IBC, Section 1905.1.9 shall be omitted.

α = Conversion factor calculated as a weighted average of the load factors for the controlling load combination. In addition, α shall include all appropriate factors to account for nonductile failure modes and required over-strength.

The requirements for member thickness, edge distance and spacing, described in this report, must apply. An example of allowable stress design values for illustrative purposes is shown in Table 6.

4.2.2 Requirements for Interaction of Tensile and Shear Forces: The interaction must be calculated and consistent with ACI 318-19 17.8, ACI 318-14 17.6 or ACI 318 (-11, -08, -05) D.7, as applicable, as follows:

For shear loads Vapplied ≤ 0.2Vallowable,ASD, the full allowable load in tension Tallowable,ASD may be taken.

For tension loads $T_{applied} \leq 0.2T_{allowable,ASD}$, the full allowable load in shear $V_{allowable,ASD}$ may be taken.

For all other cases:

$$\frac{T_{applied}}{T_{allowable,ASD}} + \frac{V_{applied}}{V_{allowable,ASD}} \leq 1.2 \qquad \text{(Eq-6)}$$

4.3 Installation:

Installation parameters are provided in Tables 1 and 2 and in Figures 1 and 2 of this report. Anchors must be installed per the manufacturer's published instructions and this report. Anchor locations must comply with this report and the plans and specifications approved by the code official. Anchors must be installed in holes drilled into concrete using carbide-tipped drill bits complying with ANSI B212.15-1994. The nominal drill diameter must be equal to the nominal diameter of the anchor. Prior to anchor installation, the hole must be cleaned in accordance with the manufacturer's published installation instructions. The anchor must be hammered into the predrilled hole until the embedment depth ring mark flushes with the concrete surface. The nut must be tightened against the washer until the torque value, T_{inst}, specified in Tables 1 and 2, is achieved.

4.4 Special Inspection:

Periodic special inspection is required, in accordance with Section 1705.1.1 and Table 1705.3 of the 2021, 2018, 2015 IBC and 2012 IBC; Section 1704.15 and Table 1704.4 of the 2009 IBC; or Section 1704.13 of the 2006 IBC, as applicable. The special inspector must make periodic inspections during anchor installation to verify anchor type, anchor dimensions, concrete type, concrete compressive strength, hole dimensions, anchor spacing, edge distances, concrete thickness, anchor embedment, installation torque, and adherence to the manufacturer's published installation instructions. The special inspector must be present as often as required in accordance with the "statement of special inspection". Under the IBC, additional requirements as set forth in Sections 1705, 1706 and 1707 must be observed, where applicable.

5.0 CONDITIONS OF USE:

The Aerosmith Sure-Wedge Anchors described in this report comply with, or are a suitable alternative to what is specified in, those codes listed in Section 1.0 of this report, subject to the following conditions:

5.1 Anchor sizes, dimensions and minimum embedment depths are as set forth in the tables of this report.

5.2 The ¼-inch-diameter anchors must be installed in accordance with the manufacturer's published installation instructions and this report, in uncracked normal-weight and lightweight concrete having a specified compressive strength of f'_c = 2,500 psi to 8,500 psi (17.2 MPa to 58.6 MPa). In case of conflict between this report and the manufacturer's instructions, this report governs.

5.3 The $^3/_8$-inch through ¾-inch anchors must be installed in accordance with the manufacturer's published installation instructions and this report, in cracked and uncracked normal-weight and lightweight concrete having a specified compressive strength of f'_c = 2,500 psi to 8,500 psi (17.2 MPa to 58.6 MPa). In case of conflict between this report and the manufacturer's instructions, this report governs.

5.4 The values of f'_c used for calculation purposes must not exceed 8,000 psi (55.1 MPa).

5.5 The concrete shall have attained its minimum design strength prior to installation of the anchors.

5.6 Strength design values are established in accordance with Section 4.1 of this report.

5.7 Allowable stress design values are established in accordance with Section 4.2 of this report.

5.8 Anchor spacing and edge distance as well as minimum member thickness must comply with Tables 1 and 2 of this report.

5.9 Prior to installation, calculations and details demonstrating compliance with this report must be submitted to the code official. The calculations and details must be prepared by a registered design professional where required by the statutes of the jurisdiction in which the project is to be constructed.

5.10 Since an ICC-ES acceptance criteria for evaluating data to determine the performance of anchors subjected to fatigue or shock load is unavailable at this time, the use of these anchors under such conditions is beyond the scope of this report.

5.11 Anchors, with the exception of ¼-inch diameter anchor, may be installed in regions of concrete where cracking has occurred or where analysis indicates cracking may occur ($f_t > f_r$), subject to the conditions of this report.

5.12 The ¼-inch diameter anchors may be used to resist short-term loading due to wind or seismic forces in locations designated as Seismic Design Categories A and B under the IBC, subject to the conditions of this report.

5.13 The $^3/_8$-inch through ¾-inch anchors may be used to resist short-term loading due to wind or seismic forces in locations designated as Seismic Design Categories A through F under the IBC, subject to the conditions of this report.

5.14 Where not otherwise prohibited in the code, anchors are permitted for use with fire-resistance-rated construction provided that at least one of the following conditions is fulfilled:

- Anchors are used to resist wind or seismic forces only.
- Anchors that support a fire-resistance-rated envelope or a fire-resistance-rated membrane, are protected by approved fire-resistance-rated materials, or have been evaluated for resistance to fire exposure in accordance with recognized standards.
- Anchors are used to support nonstructural elements.

5.15 Use of zinc-coated carbon steel anchors is limited to dry, interior locations.

5.16 Use of anchors made of stainless steel as specified in this report are permitted for exterior exposure and damp environments.

5.17 Special inspection must be provided in accordance with Section 4.4 of this report.

5.18 Anchors are manufactured under an approved quality control program with inspections by ICC-ES.

6.0 EVIDENCE SUBMITTED

Data in accordance with the ICC-ES Acceptance Criteria for Mechanical Anchors in Concrete Elements (AC193), dated October 2017 (Editorially revised December 2020), which incorporates requirements in ACI 355.2-19 and ACI 355.2-07, for use in cracked and uncracked concrete, and quality control documentation.

7.0 IDENTIFICATION

7.1 The anchors are identified by packaging labeled with the evaluation report holder's name (Aerosmith Fastening Systems) and address, anchor name, anchor size, and evaluation report number (ESR-4413). The anchors have the letters AFS and the anchor size embossed on the sleeve.

7.2 The report holder's contact information is the following:

AEROSMITH FASTENING SYSTEMS
5621 DIVIDEND ROAD
INDIANAPOLIS, INDIANA 46241
(317) 243-5959
www.aerosmithfastening.com
contact@aerosmithfastening.com

TABLE 1—CARBON STEEL ANCHOR INSTALLATION PARAMETERS[1]

Characteristic	Symbol	Unit	Nominal Anchor Diameter							
			¼"	3/8"	1/2"		5/8"		3/4"	
Outside Diameter	d_o[2]	in (mm)	¼ (6.4)	3/8 (9.5)	1/2 (12.7)	1/2 (12.7)	5/8 (15.9)	5/8 (15.9)	3/4 (19.1)	3/4 (19.1)
Nominal Embedment Depth	h_{nom}	in (mm)	1.68 (43)	2.33 (59)	2.33 (59)	3.59 (91)	3.23 (82)	4.49 (114)	3.74 (95)	5.26 (134)
Effective Embedment Depth	h_{ef}	in (mm)	1 ½ (38)	2 (51)	2 (51)	3 1/4 (83)	2 3/4 (70)	4 (102)	3 1/4 (83)	4 3/4 (121)
Minimum Hole Depth	h_{hole}	in (mm)	2 (51)	2 5/8 (67)	2 5/8 (67)	4 (102)	3 1/2 (89)	4 3/4 (121)	4 (102)	5 3/4 (146)
Clearance Hole Diameter	d_f	in (mm)	5/16 (7.9)	7/16 (11.1)	9/16 (14.3)		11/16 (17.5)		7/8 (22.2)	
Recommended Installation Torque	T_{inst}	ft.lb (Nm)	5 (7)	30 (41)	45 (61)	45 (61)	75 (102)	75 (102)	150 (203)	150 (203)
Minimum Concrete Thickness	h_{min}	in (mm)	4 (102)	4 (102)	4 (102)	6 (152)	5 1/2 (140)	6 1/2 (165)	6 (152)	8 (203)
Critical Edge Distance	c_{ac}	in (mm)	2 ¾ (70)	6 (152)	6 (152)	7 1/2 (191)	7 (178)	8 1/2 (216)	9 (229)	12 (305)
Minimum Edge Distance (c_{min}) for Spacing (s ≥)	c_{min}	in (mm)	1 ¾ (44)	2 1/2 (64)	3 (76)	2 1/2 (64)	3 1/2 (89)	3 1/2 (89)	5 (127)	4 1/2 (114)
	s ≥	in (mm)	2 ¼ (57)	6 1/2 (165)	6 (152)	6 (152)	8 (203)	6 (152)	10 1/2 (267)	9 1/2 (241)
Minimum Spacing (s_{min}) for Edge Distance (c ≥)	s_{min}	in (mm)	2 ¼ (57)	2 1/2 (64)	2 3/4 (70)	2 1/2 (64)	4 1/2 (114)	4 (102)	5 (127)	4 (102)
	c ≥	in (mm)	1 ¾ (44)	4 (102)	6 (152)	4 (102)	6 (152)	5 (127)	10 1/2 (267)	8 1/2 (216)
Minimum Overall Anchor Length	l_{anch}	in (mm)	2 ¼ (57)	3 (76)	3 ½ (89)	4 ½ (114)	4 ¼ (108)	5 ½ (140)	5 (127)	6 ½ (165)
Torque Wrench Socket Size	-	in	7/16	9/16	3/4		15/16		1 1/8	

1. The tabulated data is to be used in conjunction with the design criteria given in ACI 318 (-19 and -14) Chapter 17 or ACI 318-11 Appendix D.
2. For the 2006 IBC: d_o replaces d_a and $A_{se,N}$ replaces A_{se}.

TABLE 2—STAINLESS STEEL ANCHOR INSTALLATION PARAMETERS[1]

Characteristic	Symbol	Unit	Nominal Anchor Diameter							
			¼"	3/8"	1/2"		5/8"		3/4"	
Outside Diameter	d_o[2]	in (mm)	¼ (6.4)	3/8 (9.5)	1/2 (12.7)	1/2 (12.7)	5/8 (15.9)	5/8 (15.9)	3/4 (19.1)	3/4 (19.1)
Nominal Embedment Depth	h_{nom}	in (mm)	1.68 (43)	2.33 (59)	2.33 (59)	3.59 (91)	3.23 (82)	4.49 (114)	3.74 (95)	5.26 (134)
Effective Embedment Depth	h_{ef}	in (mm)	1 1/2 (38)	2 (51)	2 (51)	3 1/4 (83)	2 3/4 (70)	4 (102)	3 1/4 (83)	4 3/4 (121)
Minimum Hole Depth	h_{hole}	in (mm)	2 (51)	2 5/8 (67)	2 5/8 (67)	4 (102)	3 1/2 (89)	4 3/4 (121)	4 (102)	5 3/4 (146)
Clearance Hole Diameter	d_f	in (mm)	5/16 (7.9)	7/16 (11.1)	9/16 (14.3)		11/16 (17.5)		7/8 (22.2)	
Recommended Installation Torque	T_{inst}	ft.lb (Nm)	5 (7)	20 (27)	45 (61)		80 (108)		150 (203)	
Minimum Concrete Thickness	h_{min}	in (mm)	4 (102)	4 (102)	4 (102)	6 (152)	5 1/2 (140)	6 1/2 (165)	6 (152)	8 (203)
Critical Edge Distance	c_{ac}	in (mm)	3 (76)	6½ (165)	6½ (165)	7 1/2 (191)	7 (178)	8 1/2 (216)	9 (229)	12 (305)
Minimum Edge Distance (c_{min}) for Spacing (s ≥)	c_{min}	in (mm)	1 ¾ (44)	2 1/2 (64)	3 (76)	2 1/2 (64)	3 1/2 (89)	3 1/2 (89)	5 (127)	4 1/2 (114)
	s ≥	in (mm)	2 ¼ (57)	6 1/2 (165)	6 (152)	6 (152)	8 (203)	6 (152)	10½ (267)	9½ (241)
Minimum Spacing (s_{min}) for Edge Distance (c ≥)	s_{min}	in (mm)	2 ¼ (57)	2 1/2 (64)	2 3/4 (70)	2 1/2 (64)	4 1/2 (114)	4 (102)	5 (127)	4 (102)
	c ≥	in (mm)	1 ¾ (44)	4 (102)	6 (152)	4 (102)	6 (152)	5 (127)	10 1/2 (267)	8 1/2 (216)
Minimum Overall Anchor Length	l_{anch}	in (mm)	2 ¼ (57)	3 (76)	3 ½ (89)	4 ½ (114)	4 ¼ (108)	5 ½ (140)	5 (127)	6 ½ (165)
Torque Wrench Socket Size	-	in	7/16	9/16	3/4		15/16		1 1/8	

1. The tabulated data is to be used in conjunction with the design criteria given in ACI 318 (-19 and-14) Chapter 17 or ACI 318-11 Appendix D.
2. For the 2006 IBC: d_o replaces d_a and $A_{se,N}$ replaces A_{se}.

TABLE 3—SURE-WEDGE ANCHOR LENGTH CODE IDENTIFICATION SYSTEM

Length ID marking on threaded stud head		A	B	C	D	E	F	G	H	I	J	K	L	M	N	O	P	Q
Overall anchor length (in.)	From	1½	2	2½	3	3½	4	4½	5	5½	6	6½	7	7½	8	8½	9	9½
	Up to, but not including	2	2½	3	3½	4	4½	5	5½	6	6½	7	7½	8	8½	9	9½	10

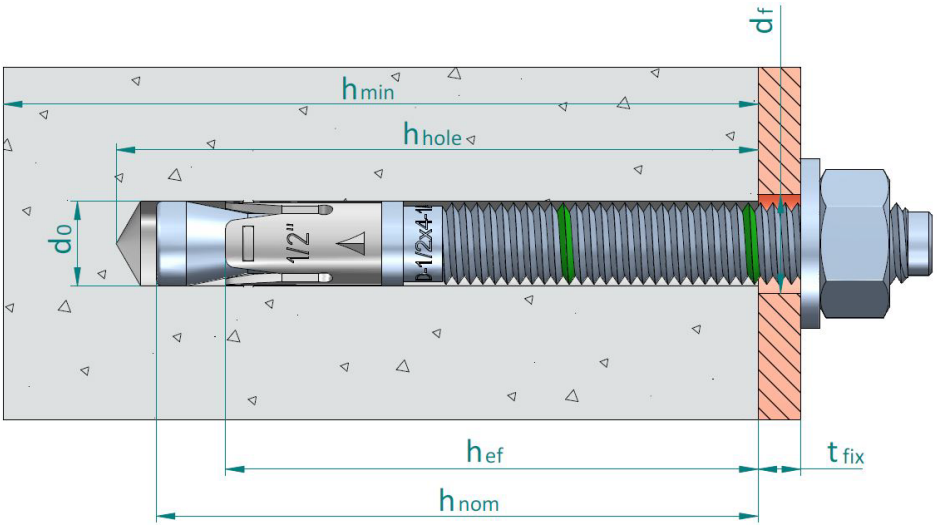

FIGURE 1—ANCHOR DIMENSIONS

TABLE 4—CARBON STEEL ANCHOR DESIGN INFORMATION[1,3,4,5]

Characteristic	Symbol	Unit	Nominal Anchor Diameter							
			1/4"	3/8"	1/2"		5/8"		3/4"	
Outside Diameter	d_o[2]	in (mm)	1/4 (6.4)	3/8 (9.5)	1/2 (12.7)	1/2 (12.7)	5/8 (15.9)	5/8 (15.9)	3/4 (19.1)	3/4 (19.1)
Nominal Embedment Depth	h_{nom}	in (mm)	1.68 (43)	2.33 (59)	2.33 (59)	3.59 (91)	3.23 (82)	4.49 (114)	3.74 (95)	5.26 (134)
Effective Embedment Depth	h_{ef}	in (mm)	1 1/2 (38)	2 (51)	2 (51)	3 1/4 (83)	2 3/4 (70)	4 (102)	3 1/4 (83)	4 3/4 (121)
Effective Steel Stress Area (Threads)	A_{se}[2]	in^2 (mm^2)	0.0318 (20.5)	0.077 (49.7)	0.141 (91.0)	0.141 (91.0)	0.226 (145.8)	0.226 (145.8)	0.334 (215.5)	0.334 (215.5)
Effective Steel Stress Area (Neck)	A_{se}[2]	in^2 (mm^2)	0.0230 (14,8)	0.0562 (36.3)	0.100 (64.5)	0.100 (64.5)	0.160 (103.2)	0.160 (103.2)	0.238 (153.5)	0.238 (153.5)
Steel Strength in Tension and Shear										
Minimum Specified Yield Strength (Threads)	f_y	psi (N/mm^2)	69,500 (480)							
Minimum Specified Yield Strength (Neck)	f_y	psi (N/mm^2)	90,500 (624)	85,000 (585)			81,000 (560)		77,000 (530)	
Minimum Specified Ultimate Strength	f_{ut}	psi (N/mm^2)	87,000 (600)							
Steel Strength in Tension	N_{sa}	lb (kN)	2,599 (11.6)	6,125 (27.2)	10,600 (47.2)	10,600 (47.2)	16,240 (72.2)	16,240 (72.2)	22,730 (101.1)	22,730 (101.1)
Strength Reduction Factor for Steel Failure in Tension	ϕ_{sa}	-	0.75							
Steel Strength in Shear	V_{sa}	lb (kN)	974 (4.33)	2,860 (12.7)	4,820 (21.4)	4,820 (21.4)	9,040 (40.2)	9,040 (40.2)	12,300 (54.7)	14,280 (63.5)
Steel Strength in Shear, Seismic	$V_{sa,eq}$	lb (kN)	NA	2,720 (12.1)	4,045 (17.9)	4,045 (17.9)	7,700 (34.2)	7,700 (34.2)	8,870 (39.4)	8,870 (39.4)
Strength Reduction Factor for Steel Failure in Shear	ϕ_{sa}	-	0.65							
Pullout Strength in Tension										
Pullout Strength in Uncracked Concrete	$N_{p,uncr}$	lb (kN)	1,575 (7.01)	3,325 (14.79)	3,394 (15.10)	5,723 (25.46)	-	-	-	-
Pullout Strength in Cracked Concrete	$N_{p,cr}$	lb (kN)	NA	2,163 (9.62)	-	4,252 (18.91)	-	-	-	-
Pullout Strength in Cracked Concrete, Seismic	N_{eq}	lb (kN)	NA	2,115 (9.41)	-	4,252 (18.91)	-	-	-	-
Anchor Category	1, 2 or 3	-	1	1	1	1	1	1	1	1
Strength Reduction Factor for Pullout Strength in Tension	ϕ_p	-	0.65							
Concrete Breakout Strength in Tension										
Effectiveness Factor for Uncracked Concrete	k_{uncr}	-	24	24	24	24	24	24	27	24
Effectiveness Factor for Cracked Concrete	k_{cr}	-	-	17	17	17	21	17	21	21
Strength Reduction Factor for Concrete Breakout Strength in Tension	ϕ_{cb}	-	0.65							
Axial stiffness in service load range in uncracked concrete	β_{uncr}	lb/inch (N/mm)	162,300 (28,424)	169,540 (29,690)	296,770 (51,972)	129,020 (22,594)	134,210 (23,503)	88,970 (15,580)	165,900 (29,053)	138,430 (24,242)
Axial stiffness in service load range in cracked concrete	β_{cr}	lb/inch (N/mm)	NA	74,240 (13,001)	76,285 (13,359)	52,680 (9,225)	48,940 (8,570)	61,430 (10,758)	75,610 (13,241)	90,400 (15,830)
Normalization Exponent, Uncracked Concrete	n	-	0.32	0.38	0.39	0.50	0.50	0.50	0.50	0.50
Normalization Exponent, Cracked Concrete	n	-	NA	0.50	0.50	0.46	0.50	0.50	0.50	0.50
Concrete Breakout Strength in Shear										
Nominal Diameter	d_o[2]	in (mm)	1/4 (6.4)	3/8 (9.5)	1/2 (12.7)	1/2 (12.7)	5/8 (15.9)	5/8 (15.9)	3/4 (19.1)	3/4 (19.1)
Load Bearing Length of Anchor	l_e	in (mm)	1 1/2 (38)	2 (51)	2 (51)	3 1/4 (83)	2 3/4 (70)	4 (102)	3 1/4 (83)	4 3/4 (121)
Reduction Factor for Concrete Breakout Strength in Shear	ϕ_{cb}	-	0.70							
Concrete Pryout Strength in Shear										
Coefficient for Pryout Strength	k_{cp}	-	1.0	1.0	1.0	2.0	2.0	2.0	2.0	2.0
Reduction Factor for Pryout Strength in Shear	ϕ_{cp}	-	0.70							

For **SI:** 1 inch = 25.4mm, 1lbf = 4.45N, 1 lb/in = 0.175 N/mm, 1 psi = 0.00689 MPa = 0.00689 N/mm², 1 in^2 = 645 mm^2, 1 lb/in = 0.175 N/mm.

1. The tabulated data is to be used in conjunction with the design criteria given in ACI 318 (-19 and -14) Chapter 17 or ACI 318-11 Appendix D.
2. For the 2006 IBC: d_o replaces d_a and $A_{se,N}$ replaces A_{se}.
3. The strength reduction factors apply when the load combinations of Section 1605.1 of the 2021 IBC or Section 1605.2 of the 2018, 2015, 2012,2009 and 2006 IBC, ACI 318 (-19 and -14) Section 5.3 or ACI 318-11 Section 9.2 are used, and the requirements of ACI 318-19 17.5.3, ACI 318-14 17.3.3(c) or ACI 318-11 D.4.3(c), as applicable, for Condition B (supplementary reinforcement not present) are met. For installations where complying reinforcement can be verified, the applicable strength reduction factors described in ACI 318-19 17.5.3, ACI 318-14 17.3.3(c) or ACI 318-11 D.4.3(c), as applicable, may be used for Condition A (supplementary reinforcement present). If the load combinations of ACI 318-11 Appendix C are used, the appropriate strength reduction factor must be determined in accordance with ACI 318-11 D4.4(a) or D.4.4(c) for Condition B (supplementary reinforcement not present), as applicable.
4. Where no value is reported for pullout strength, this resistance does not need to be considered.
5. NA = Not Applicable.

TABLE 5—STAINLESS STEEL ANCHOR DESIGN INFORMATION[1,3,4,5]

Characteristic	Symbol	Unit	Nominal Anchor Diameter							
			1/4"	3/8"	1/2"		5/8"		3/4"	
Outside Diameter	d_o[2]	in (mm)	1/4 (6.4)	3/8 (9.5)	1/2 (12.7)	1/2 (12.7)	5/8 (15.9)	5/8 (15.9)	3/4 (19.1)	3/4 (19.1)
Nominal Embedment Depth	h_{nom}	in (mm)	1.68 (43)	2.33 (59)	2.33 (59)	3.59 (91)	3.23 (82)	4.49 (114)	3.74 (95)	5.26 (134)
Effective Embedment Depth	h_{ef}	in (mm)	1 1/2 (38)	2 (51)	2 (51)	3 1/4 (83)	2 3/4 (70)	4 (102)	3 1/4 (83)	4 3/4 (121)
Effective Steel Stress Area (Threads)	A_{se}[2]	in^2 (mm^2)	0.0318 (20.5)	0.077 (49.7)	0.141 (91.0)	0.141 (91.0)	0.226 (145.8)	0.226 (145.8)	0.334 (215.5)	0.334 (215.5)
Effective Steel Stress Area (Neck)	A_{se}[2]	in^2 (mm^2)	0.0258 (14,8)	0.061 (39.6)	0.112 (72.4)	0.112 (72.4)	0.164 (105.7)	0.164 (105.7)	0.239 (153.9)	0.239 (153.9)
Steel Strength in Tension and Shear										
Minimum Specified Yield Strength (Threads)	f_y	psi (N/mm^2)	76,100 (525)	70,600 (487)			76,100 (525)			
Minimum Specified Yield Strength (Neck)	f_y	psi (N/mm^2)	87,300 (602)							
Minimum Specified Ultimate Strength (Threads)	f_{ut}	psi (N/mm^2)	101,500 (700)	94,300 (650)			101,500 (700)			
Minimum Specified Ultimate Strength (Neck)	f_{ut}	psi (N/mm^2)	101,500 (700)							
Steel Strength in Tension	N_{sa}	lb (kN)	2,615 (11.6)	6,229 (27.7)	11,388 (50.7)	11,388 (50.7)	16,627 (74.0)	16,627 (74.0)	24,218 (107.7)	24,218 (107.7)
Strength Reduction Factor for Steel Failure in Tension	ϕ_{sa}	-	0.75							
Steel Strength in Shear	V_{sa}	lb (kN)	1,861 (8.3)	4,008 (17.8)	4,745 (21.1)	7,301 (32.5)	10,163 (45.2)	10,163 (45.2)	14,805 (65.9)	14,805 (65.9)
Steel Strength in Shear, Seismic	$V_{sa,eq}$	lb (kN)	NA	4,008 (17.8)	4,745 (21.1)	6,596 (29.3)	7,740 (34.4)	7,740 (34.4)	10,556 (47.0)	10,556 (47.0)
Strength Reduction Factor for Steel Failure in Shear	ϕ_{sa}	-	0.65							
Pullout Strength in Tension										
Pullout Strength in Uncracked Concrete	$N_{p,uncr}$	lb (kN)	1,247 (5.6)	3,299 (14.7)	3,723 (16.6)	6,257 (27.8)	-	9,977 (44.4)	-	-
Pullout Strength in Cracked Concrete	$N_{p,cr}$	lb (kN)	NA	2,361 (10.5)	2,117 (9.4)	-	-	-	-	-
Pullout Strength in Cracked Concrete, Seismic	N_{eq}	lb (kN)	NA	2,361 (10.5)	2,117 (9.4)	-	-	-	-	-
Anchor Category	1, 2 or 3	-	1	1	1	1	1	1	1	1
Strength Reduction Factor for Pullout Strength in Tension	ϕ_p	-	0.65							
Concrete Breakout Strength in Tension										
Effectiveness Factor for Uncracked Concrete	k_{uncr}	-	24	24	24	24	24	24	24	24
Effectiveness Factor for Cracked Concrete	k_{cr}	-	-	17	17	17	17	17	21	17
Strength Reduction Factor for Concrete Breakout Strength in Tension	ϕ_{cb}	-	0.65							
Axial stiffness in service load range in uncracked concrete	β_{uncr}	lb/inch (N/mm)	130,772 (22,902)	99,669 (17,455)	177,031 (31,003)	45,481 (7,965)	179,362 (31,411)	74,892 (13,116)	282,916 (49,546)	209,464 (36,683)
Axial stiffness in service load range in cracked concrete	β_{cr}	lb/inch (N/mm)	NA	38,385 (6,722)	70,569 (12,359)	41,385 (7,248)	71,270 (12,481)	43,709 (7,655)	154,605 (27,075)	120,824 (21,159)
Normalization Exponent, Uncracked Concrete	n	-	0.13	0.30	0.32	0.48	0.27	0.44	0.43	0.33
Normalization Exponent, Cracked Concrete	n	-	NA	0.45	0.50	0.49	0.50	0.50	0.27	0.43
Concrete Breakout Strength in Shear										
Nominal Diameter	d_o[2]	in (mm)	1/4 (6.4)	3/8 (9.5)	1/2 (12.7)	1/2 (12.7)	5/8 (15.9)	5/8 (15.9)	3/4 (19.1)	3/4 (19.1)
Load Bearing Length of Anchor	l_e	in (mm)	1 1/2 (38)	2 (51)	2 (51)	3 1/4 (83)	2 3/4 (70)	4 (102)	3 1/4 (83)	4 3/4 (121)
Reduction Factor for Concrete Breakout Strength in Shear	ϕ_{cb}	-	0.70							
Concrete Pryout Strength in Shear										
Coefficient for Pryout Strength	k_{cp}	-	1.0	1.0	1.0	2.0	2.0	2.0	2.0	2.0
Reduction Factor for Pryout Strength in Shear	ϕ_{cp}	-	0.70							

For **SI:** 1 inch = 25.4mm, 1lbf = 4.45N, 1 lb/in = 0.175 N/mm, 1 psi = 0.00689 MPa = 0.00689 N/mm², 1 in^2 = 645 mm^2, 1 lb/in = 0.175 N/mm.

1. The tabulated data is to be used in conjunction with the design criteria given in ACI 318 (-19 and -14) Chapter 17 or ACI 318-11 Appendix D.
2. For the 2006 IBC: d_o replaces d_a and $A_{se,N}$ replaces A_{se}.3. The strength reduction factors apply when the load combinations of Section 1605.1 of the 2021 IBC or Section 1605.2 of the 2018, 2015, 2012,2009 and 2006 IBC, ACI 318 (-19 and -14) Section 5.3 or ACI 318-11 Section 9.2 are used, and the requirements of ACI 318-19 17.5.3, ACI 318-14 17.3.3(c) or ACI 318-11 D.4.3(c), as applicable, for Condition B (supplementary reinforcement not present) are met. For installations where complying reinforcement can be verified, the applicable strength reduction factors described in ACI 318-19 17.5.3, ACI 318-14 17.3.3(c) or ACI 318-11 D.4.3(c), as applicable, may be used for Condition A (supplementary reinforcement present). If the load combinations of ACI 318-11 Appendix C are used, the appropriate strength reduction factor must be determined in accordance with ACI 318-11 D4.4(a) or D.4.4(c) for Condition B (supplementary reinforcement not present), as applicable.
4. Where no value is reported for pullout strength, this resistance does not need to be considered.
5. NA = Not Applicable.

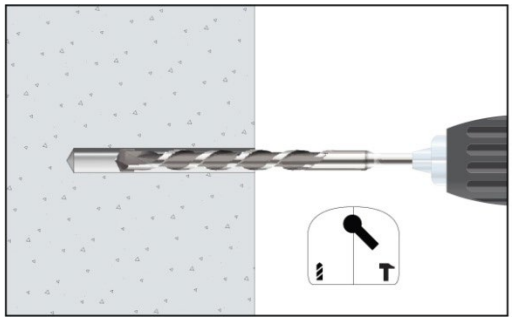

1. DRILL

Drill a hole into the base material of the correct diameter and depth using a drill bit that meets the requirements of ANSI B212.15

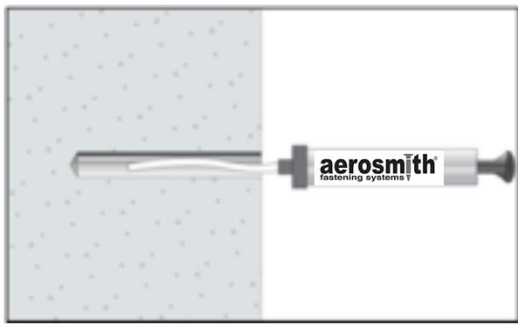

2. BLOW AND CLEAR

Remove dust and debris from hole using a hand pump, compressed air or a vacuum to remove loose particles left from drilling.

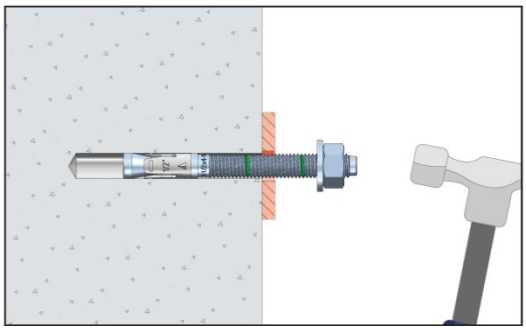

3. INSTALL

Position the washer on the anchor and thread on the nut. If installing through a fixture drive the anchor through the fixture into the hole. Be sure the anchor is driven until the corresponding green mark depth is leveled with the base material surface.

Use a hammer if necessary.

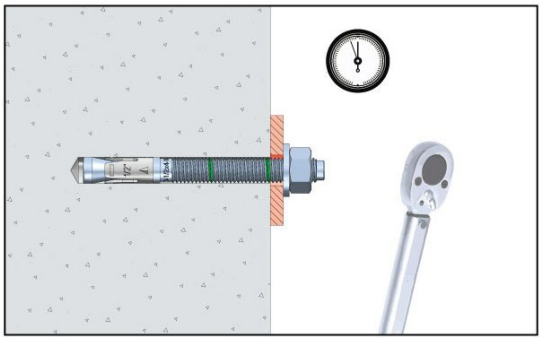

4. APPLY TORQUE

Tighten the anchor with a torque wrench by applying the required installation torque, T_{ins}. Note: the threaded stud will draw up during tightening of the nut; the expansion wedge (clip) remains in the original position.

Once installed, the total length of the anchor may be checked using the letter on the head.

FIGURE 2—MANUFACTURER'S PUBLISHED INSTALLATION INSTRUCTIONS

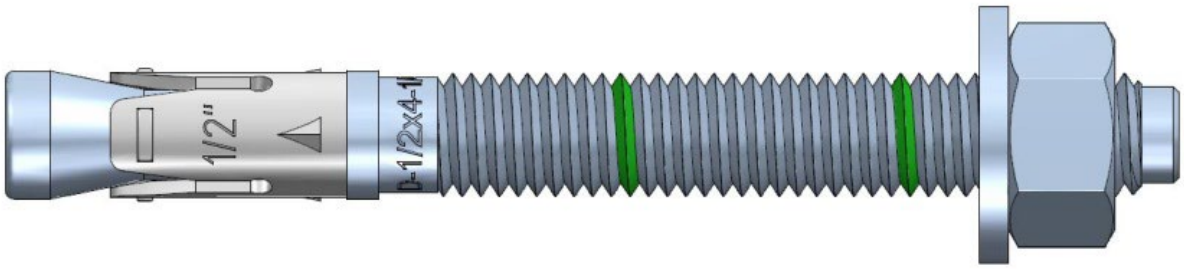

FIGURE 3—SURE-WEDGE ANCHOR

TABLE 6—EXAMPLE ALLOWABLE STRESS DESIGN VALUES FOR ILLUSTRATIVE PURPOSES[1,2,3,4,5,6,7,8,9,10]

Nominal Anchor Diameter d_o (inch)	Effective Embedment Depth h_{ef} (inch)	$T_{allowable,ASD}$ (lb)
1/4	1 1/2	692
3/8	2	1,460
1/2	2	1,491
1/2	3 1/4	2,513
5/8	2 3/4	2,403
5/8	4	4,216
3/4	3 1/4	3,474
3/4	4 3/4	5,456

1. Single anchor.
2. Static tension loading only.
3. Concrete determined to remain uncracked for the life of the anchorage.
4. Load combinations taken from ACI 318 (-19 and -14) Section 5.3 or ACI 318-11 Section 9.2, as applicable with no seismic loading.
5. 30% Dead Load (D) and 70% Live Load (L), controlling load combination 1.2D + 1.6L.
6. Calculation of the weighted average for α = 1.2 x 0.3 + 1.6 x 0.7 = **1.48**
7. Normal weight concrete, f'_c = 2,500 psi.
8. $c_{a1} = c_{a2} \geq c_{ac}$
9. Concrete thickness $h \geq h_{min}$.
10. Values are for Condition B (supplementary reinforcement in accordance with ACI 318-19 17.5.3, ACI 318-14 7.3.3 or ACI 318-11 D.4.3 is not provided).

Illustrative procedure of Allowable Stress Design calculation. Method ACI 318-19, Chapter 17

Per the figure below and the following information:

- 2 anchors Sure-Wedge 1/2"x 4-1/2" anchor length
- Concrete: strength 4,000 psi, cracked, 6-1/2 inches thick
- h_{ef} = 3-1/4 in
- Anchor Layout: as per sketch
- Static or quasi-static loads

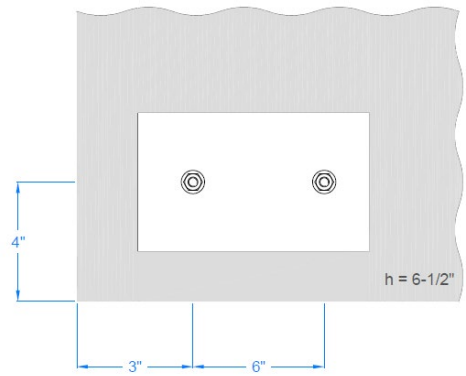

Step	ACI 318-19 Section Reference	ESR Section Reference	CALCULATIONS
1	17.9	Section 4.1.11 Table 1	Verify spacing / edge distance / member thickness c_{a1} = 3 in with s= 6 in > 2-1/2 in with s= 6 in → verified c_{a2} = 4 in with s= 6 in > 2-1/2 in with s= 6 in → verified h = 6-1/2 in > 6 in → verified
2	17.6.1.2	Section 4.1.2 Table 4	Calculate steel capacity on a single fastener loaded in tension ϕN_{sa}= (0.75) (10,600) = 7,950 lbf Group of fasteners ϕN_s= n ϕN_{sa}= (2) (7,950) = **15,900** lbf
3	17.6.2.1	4.1.3	Calculation concrete strength capacity on the group of fasteners loaded in tension $\phi N_{cbg} = \phi \frac{A_{Nc}}{A_{Nco}} \psi_{ec,N}\, \psi_{ed,N}\, \psi_{c,N}\, \psi_{cp,N}\, N_b$
3.1	17.6.2.1	Table 4	A_{Nc} = (c_{a1}+1.5 h_{ef}) (c_{a2}+s+1.5 h_{ef}) = (4+4.88) (3+6+4.88) = 123.25 A_{Nco} = 9 $(h_{ef})^2$ = 9 $(3.25)^2$ = 95.06
3.2	17.6.2.3		No load eccentricity → e_v = 0 → $\psi_{ec,N} = 1.00$
3.3	17.6.2.4	Table 1	$C_{a,min}$ < 1.5 h_{ef} → $\psi_{ed,N} = 0.7 + 0.3 \frac{c_{a,min}}{1.5\, h_{ef}} = 0.7 + 0.3 \frac{3}{4.88} = 0.88$
3.4	17.6.2.5		Cracked concrete → $\psi_{c,N} = 1.00$
3.5	17.6.2.6		Cracked concrete → $\psi_{cp,N} = 1.00$
3.6	17.6.2.2	4.1.3	$N_b = k_c\, \lambda_a \sqrt{f_c'}\, h_{ef}^{1,5} = (17)\,(1.0)\sqrt{4000}\,(3.25)^{1.5} = 6{,}299$ lbf thus
	17.6.2.1	4.1.3	$\phi N_{cbg} = (0.65)\, \frac{123.25}{95.06}\, (1.0)(0.88)(1.0)(6{,}299) = \mathbf{4{,}671}$ lbf
4	17.6.3.1	Section 4.1.4 Table 4	Calculate pull out strength on single fastener loaded in tension $\phi N_{p,f} = \phi\, \psi_{c,P} N_{p,2500} \left(\frac{f_c'}{2{,}500}\right)^n = (0.65)(1.00)\,(4{,}252) \left(\frac{4{,}000}{2{,}500}\right)^{0.46} = 3{,}430$ lbf Group of fasteners ϕN_p= n ϕN_p= (2) (3,430) = **6,860** lbf
5	17.5.2		Governing tension strength: Minimum value of steel, concrete breakout, pull out: ϕN_n= min [ϕN_s; ϕN_c; ϕN_p] = **4,671** lbf
6	5.3	Section 4.2.1	Calculation of conversion factor, α, to allowable stress design α = (1.2) D +(1.6) L = (1.2) (0.30) + (1,6) (0.6) = **1.48**
7	-	Section 4.2.1	Calculation of allowable stress design in tension: $T_{alowable,ASD} = \frac{\phi N_n}{\alpha} = \frac{4{,}671}{1.48} = \mathbf{3{,}156}$ lbf

DIVISION: 03 00 00—CONCRETE
Section: 03 16 00—Concrete Anchors

DIVISION: 05 00 00—METALS
Section: 05 05 19—Post-Installed Concrete Anchors

REPORT HOLDER:

AEROSMITH FASTENING SYSTEMS

EVALUATION SUBJECT:

AEROSMITH SURE-WEDGE™ ANCHOR FOR CRACKED AND UNCRACKED CONCRETE

1.0 REPORT PURPOSE AND SCOPE

Purpose:

The purpose of this evaluation report supplement is to indicate that the Aerosmith Sure-Wedge Anchor for cracked and uncracked concrete, described in ICC-ES evaluation report ESR-4413, has also been evaluated for compliance with the codes noted below as adopted by the Los Angeles Department of Building and Safety (LADBS).

Applicable code editions:

- 2020 *City of Los Angeles Building Code (LABC)*
- 2020 *City of Los Angeles Residential Code (LARC)*

2.0 CONCLUSIONS

The Aerosmith Sure-Wedge Anchor for cracked and uncracked concrete, described in Sections 2.0 through 7.0 of the evaluation report ESR-4413, complies with the LABC Chapter 19, and the LARC, and is subject to the conditions of use described in this supplement.

3.0 CONDITIONS OF USE

The Aerosmith Sure-Wedge Anchor for cracked and uncracked concrete described in this evaluation report must comply with all of the following conditions:

- All applicable sections in the evaluation report ESR-4413.
- The design, installation, conditions of use and identification of the anchors are in accordance with the 2018 *International Building Code®* (IBC) provisions noted in the evaluation report ESR-4413.
- The design, installation and inspection are in accordance with additional requirements of LABC Chapters 16 and 17 and City of Los Angeles Information Bulletin P/BC 2020-092, as applicable. References to Los Angeles Research Reports (LARR) within the COLA Information Bulletin P/BC may be substituted with this supplement.
- Under the LARC, an engineered design in accordance with LARC Section R301.1.3 must be submitted.
- The allowable strength and design strength values listed in the evaluation report and tables are for the connection of the anchors to the concrete. The connection between the anchors and the connected members shall be checked for capacity (which may govern).
- For use in wall anchorage assemblies to flexible diaphragm applications, anchors shall be designed per the requirements of City of Los Angeles Information Bulletin P/BC 2020-071.

This supplement expires concurrently with the evaluation report, reissued March 2026.

ICC-ES Evaluation Reports are not to be construed as representing aesthetics or any other attributes not specifically addressed, nor are they to be construed as an endorsement of the subject of the report or a recommendation for its use. There is no warranty by ICC Evaluation Service, LLC, express or implied, as to any finding or other matter in this report, or as to any product covered by the report.

Copyright © 2026 ICC Evaluation Service, LLC. All rights reserved.

DIVISION: 03 00 00—CONCRETE
Section: 03 16 00—Concrete Anchors

DIVISION: 05 00 00—METALS
Section: 05 05 19—Post-Installed Concrete Anchors

REPORT HOLDER:

AEROSMITH FASTENING SYSTEMS

EVALUATION SUBJECT:

AEROSMITH SURE-WEDGE™ ANCHOR FOR CRACKED AND UNCRACKED CONCRETE

1.0 REPORT PURPOSE AND SCOPE

Purpose:

The purpose of this evaluation report supplement is to indicate that the Aerosmith Sure-Wedge Anchor for cracked and uncracked concrete, described in ICC-ES evaluation report ESR-4413, has also been evaluated for compliance with the codes noted below.

Applicable code editions:

- 2019 *California Building Code* (CBC)

For evaluation of applicable chapters adopted by the California Office of Statewide Health Planning and Development (OSHPD) AKA: California Department of Health Care Access and Information (HCAI) and the Division of the State Architect (DSA), see Sections 2.1.1 and 2.1.2 below.

- 2019 *California Residential Code* (CRC)

2.0 CONCLUSIONS

2.1 CBC:

The Aerosmith Sure-Wedge Anchor for cracked and uncracked concrete, described in Sections 2.0 through 7.0 of the evaluation report ESR-4413, complies with CBC Chapter 19, provided the design and installation are in accordance with the 2018 *International Building Code®* (IBC) provisions noted in the evaluation report and the additional requirements of CBC Chapters 16 and 17.

2.1.1 OSHPD:

The applicable OSHPD Sections and Chapters of the CBC are beyond the scope of this supplement.

2.1.2 DSA:

The applicable DSA Sections and Chapters of the CBC are beyond the scope of this supplement.

2.2 CRC:

The Aerosmith Sure-Wedge Anchor for cracked and uncracked concrete, described in Sections 2.0 through 7.0 of the evaluation report ESR-4413, complies with the CRC Section R301.1.3, provided the design and installation are in accordance with the 2018 *International Building Code®* (IBC) provisions noted in the evaluation report, and the additional requirements of CBC Chapters 16 and 17.

This supplement expires concurrently with the evaluation report, reissued March 2026.

ICC-ES Evaluation Reports are not to be construed as representing aesthetics or any other attributes not specifically addressed, nor are they to be construed as an endorsement of the subject of the report or a recommendation for its use. There is no warranty by ICC Evaluation Service, LLC, express or implied, as to any finding or other matter in this report, or as to any product covered by the report.

Copyright © 2026 ICC Evaluation Service, LLC. All rights reserved.

DIVISION: 03 00 00—CONCRETE
Section: 03 16 00—Concrete Anchors

DIVISION: 05 00 00—METALS
Section: 05 05 19—Post-Installed Concrete Anchors

REPORT HOLDER:

AEROSMITH FASTENING SYSTEMS

EVALUATION SUBJECT:

AEROSMITH SURE-WEDGE™ ANCHOR FOR CRACKED AND UNCRACKED CONCRETE

1.0 REPORT PURPOSE AND SCOPE

Purpose:

The purpose of this evaluation report supplement is to indicate that the Aerosmith Sure-Wedge Anchor for cracked and uncracked concrete, described in ICC-ES evaluation report ESR-4413, has also been evaluated for compliance with the codes noted below.

Applicable code editions:

- 2020 *Florida Building Code—Building*
- 2020 *Florida Building Code—Residential*

2.0 CONCLUSIONS

The Aerosmith Sure-Wedge Anchor for cracked and uncracked concrete, described in Sections 2.0 through 7.0 of ICC-ES evaluation report ESR-4413, complies with the *Florida Building Code—Building* and the *Florida Building Code—Residential*, provided the design requirements are determined in accordance with the *Florida Building Code—Building* or the *Florida Building Code—Residential,* as applicable. The installation requirements noted in ICC-ES evaluation report ESR-4413 for the 2018 *International Building Code®* meet the requirements of the *Florida Building Code—Building* or the *Florida Building Code—Residential,* as applicable, with the following conditions:

Use of the Aerosmith Sure-Wedge Anchor for cracked and uncracked concrete have also been found to be in compliance with the High-Velocity Hurricane Zone provisions of the *Florida Building Code—Building* and *Florida Building Code—Residential,* with the following conditions:

a) For anchorage to wood members, the connection subject to uplift, must be designed for no less than 700 pounds (3114 N).

b) For connection to aluminum members, all expansion anchors must be installed no less than 3 inches from the edge of concrete slab and/or footing. All expansion anchors shall develop an ultimate withdrawal resisting force equal to four times the imposed load, with no stress increase for duration of load.

For products falling under Florida Rule 61G20-3, verification that the report holder's quality assurance program is audited by a quality assurance entity approved by the Florida Building Commission for the type of inspections being conducted is the responsibility of an approved validation entity (or the code official when the report holder does not possess an approval by the Commission).

This supplement expires concurrently with the evaluation report, reissued March 2026.

ICC-ES Evaluation Reports are not to be construed as representing aesthetics or any other attributes not specifically addressed, nor are they to be construed as an endorsement of the subject of the report or a recommendation for its use. There is no warranty by ICC Evaluation Service, LLC, express or implied, as to any finding or other matter in this report, or as to any product covered by the report.

Copyright © 2026 ICC Evaluation Service, LLC. All rights reserved.